1. MECHANICAL & ASSEMBLY :

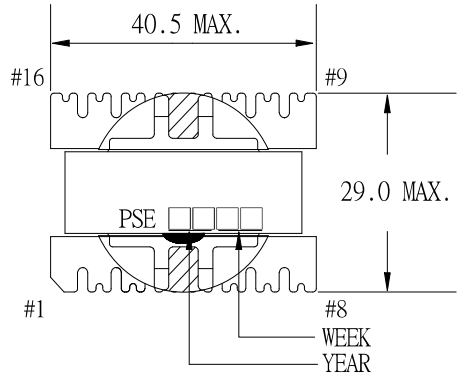

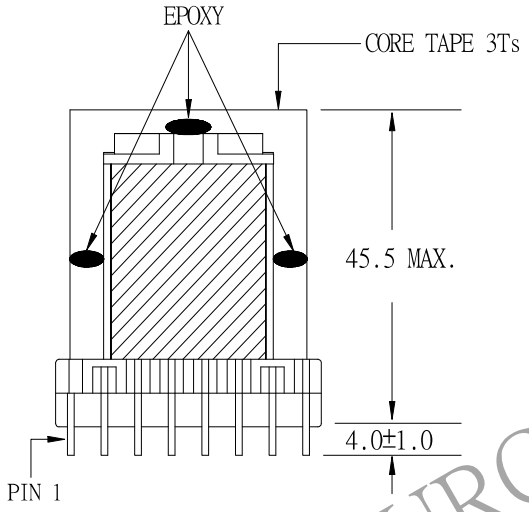

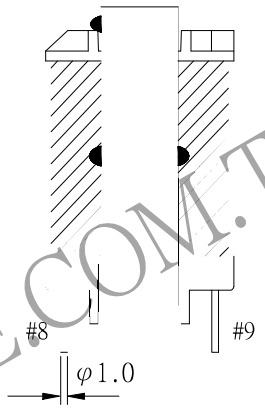

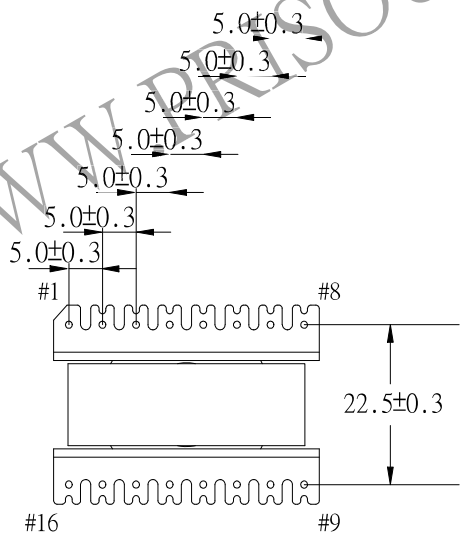

NOTE:

1. EPOXY FIXED BETWEEN CORE & CORE (TTL:4 POINTS) POXY FIXED TOP OF BOBBIN & CORE.(ONE POINT AT PIN1-8 SIDE).
2. PIN 9 CUT SHORTER AFTER SOLDERING

UNIT:m/m

WWW.PRISOURCE.COM.TW

REPORT BY	CHECK BY	APPROVED BY	CUSTOMER :	DATE	
			PART NO：54P-16110	REV NO.	
			ISSUE NO：	PAGE	4 – 1

2. WINDING CONFIGURATION:

STEP	WINDING	MARGIN TAPE	START-FINIS	COPPER WIRE	TURNS	TUBE	LAYER	METHOD
1	NP1	4.0mm/4.0mm×1T	3 - 4	0.24φx2	31	#22/#22	3Ts	BIFILAR, SPACE
2	NS1	4.0mm/4.0mm×4Ts	9.10 - 13.14	0.1/80Cφx2	3	#15/#15	3Ts	BIFILAR, SPACE
3	NP2	4.0mm/4.0mm×1T	4 - 5	0.24φx2	31	#22/#22	3Ts	BIFILAR, SPACE
4	NS2	4.0mm/4.0mm×4Ts	11.12 - 15.16	0.1/80Cφx2	3	#15/#15	3Ts	BIFILAR, SPACE
5	NG1	4.0mm/4.0mm×1T	7 - 8	0.1φ	1	#26/#26	3Ts	CENTER, CLOSE
6	NB1	4.0mm/4.0mm×1T	2 - 1	0.1φ	13	#26/#26	3Ts	CENTER, CLOSE

NOTE:

3. ELECTRICAL CHARACTERISTICS:

PIN NO.	INDUCTANCE 1.0 KHz, 1.0Vrms	LEAKAGE INDUCTANCE KHz, Vrms	VOLTAGE RATIO(V) F= 20KHz	DCR MAX. AT 25℃
3 - 5	1.23 mH±10.0%		INPUT 1 Vrms	0.75 Ω
3 - 4			0.4976 Vrms±4.0%	0.34 Ω
9.10 - 13.14			0.0484 Vrms±7.0%	4.50 mΩ
4 - 5			0.5017 Vrms±3.0%	0.43 Ω
11.12 – 15.16			0.0484 Vrms±7.0%	5.00 mΩ
7 - 8			0.0160 Vrms±7.0%	0.31 Ω
2 - 1			0.2090 Vrms±4.0%	2.70 Ω

WWW.PRISOURCE.COM.TW

HI-POT TEST :(AT 1 mA ,3 SEC)

PRI.SEC. TO CORE 3750 VAC

PRI. TO SEC. 3750 VAC

INSULATION RESISTANCE:(AT DC 500V)

PRI.SEC. TO CORE 100 MΩ MIN.

PRI. TO SEC. 100 MΩ MIN.

REPORT BY	CHECK BY	APPROVED BY	CUSTOMER :	DATE	
			PART NO：54P-16110	REV NO.	
			ISSUE NO：	PAGE	4 – 2

4.WINDING SEQUENCE:

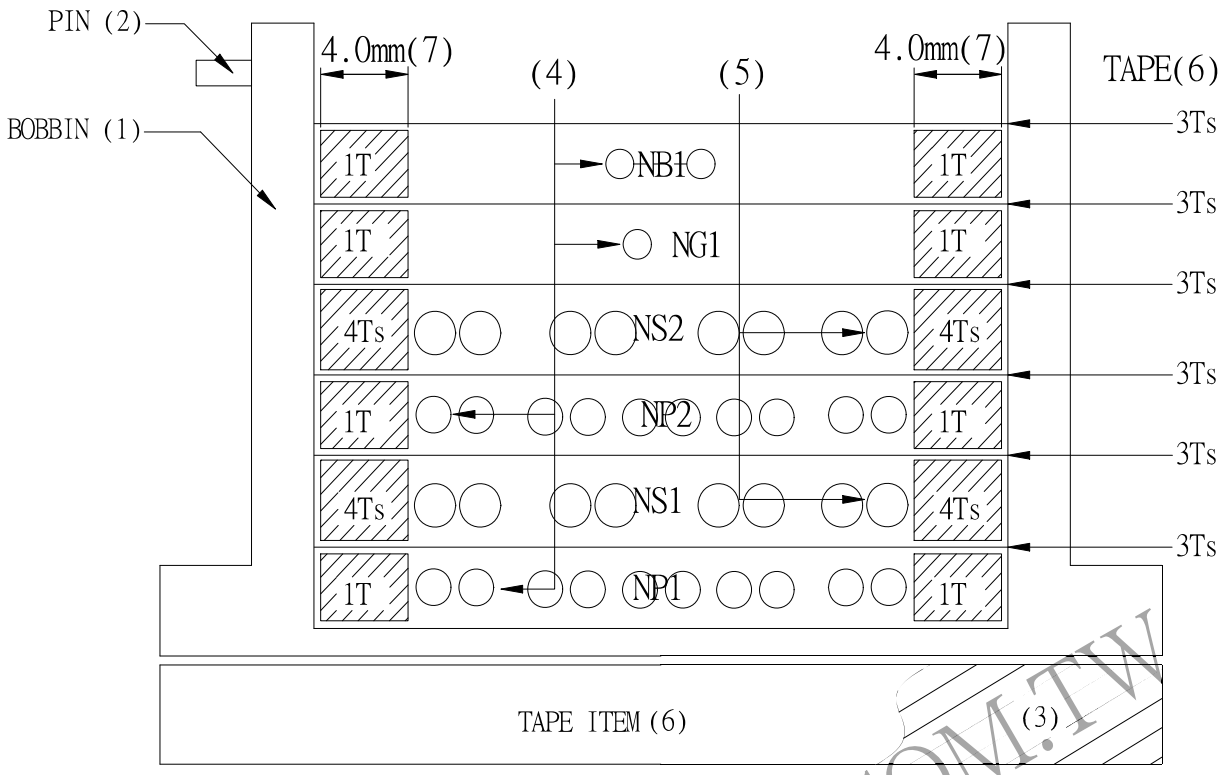

NP1,NP2,NG1,NB1 WINDING FROM PIN 1-8 SIDE
NS1,NS2, WINDING FROM PIN 9-16 SIDE

5.SCHEMATIC:

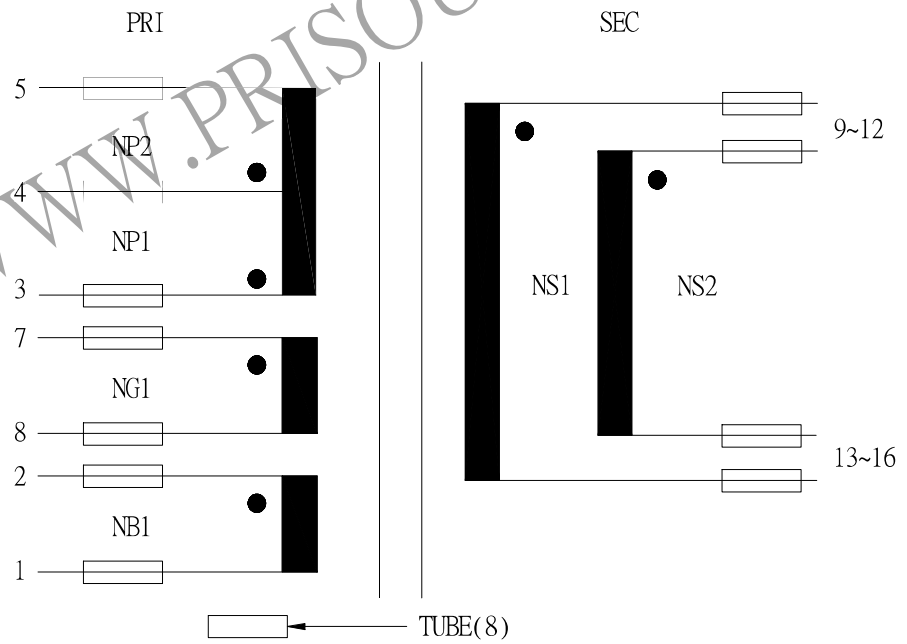

WWW.PRISOURCE.COM.TW

REPORT BY	CHECK BY	APPROVED BY	CUSTOMER :	DATE	
			PART NO：54P-16110	REV NO.	
			ISSUE NO：	PAGE	4 – 3