1. MECHANICAL & ASSEMBLY :

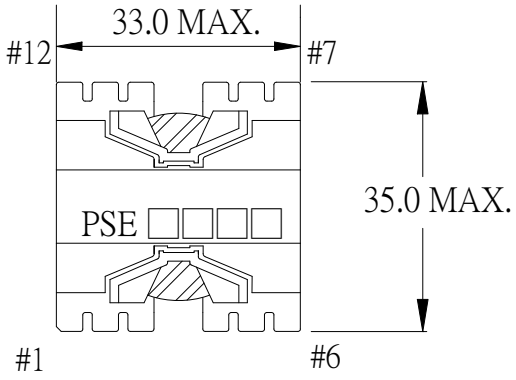


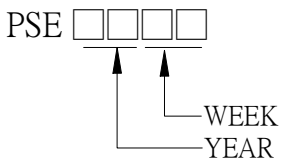


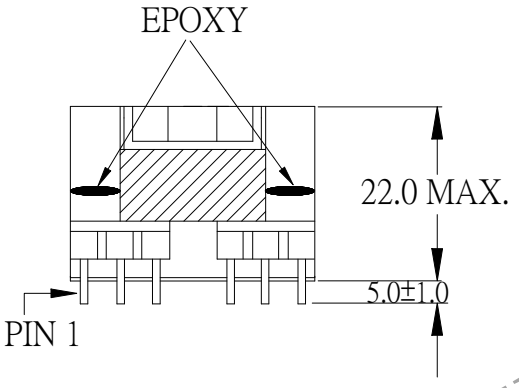


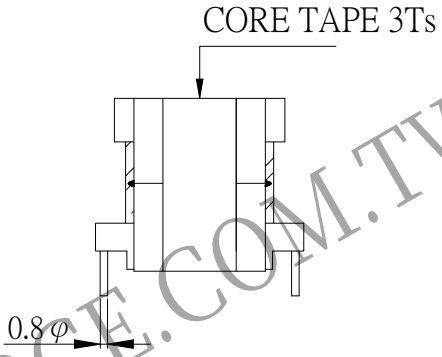


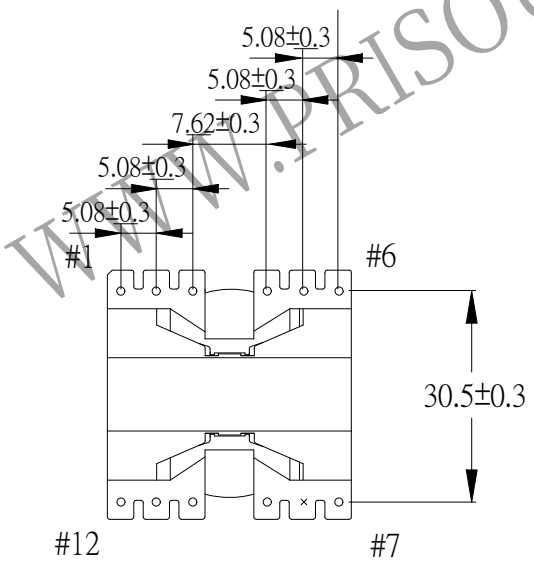


NOTE:

1. PIN 8 NO
2. EPOXY FIXED BETWEEN CORE & CORE (TTL:4 POINTS) ADHESIVE KE-45W **ON** CORE CENTER LEG(ONE POINT) ADHESIVE 6020H FIXED BETWEEN CORE & CORE (TTL:1 POINTS)
3. NOT dipped in varnish

WWW.PRISOURCE.COM.TW

UNIT : m/m

| REPORT BY | CHECK BY | APPROVED BY | CUSTOMER : | DATE | |
|---|---|---|---|---|---|
| | | | PART NO：82P-13019 | REV NO. | |
| | | | ISSUE NO： | PAGE | 4 - 1 |

## 2.WINDING CONFIGURATION:

| STEP | WINDING | MARGIN TAPE | START-FINISH | COPPER WIRE | TURNS | LAYER TAPE | TUBE | METHOD |
|---|---|---|---|---|---|---|---|---|
| 1 | N1 | | 3 – 4 | 0.20φ | 3 | 2Ts | | CLOSE |
| 2 | N2 | | 9 – 10 | 0.07φ/60C | 50 | 2Ts | #18 | CLOSE |
| | | | | | | | | |
| | | | | | | | | |
| | | | | | | | | |
| | | | | | | | | |
| | | | | | | | | |

## 3. ELECTRICAL CHARACTERISTICS:

| PIN NO. | INDUCTANCE 10 KHz, 1.0Vrms | LEAKAGE INDUCTANCE 100KHz, 0.1Vrms | VOLTAGE RATIO(V) F= 10KHz | DCR MAX. AT 25℃ |
|---|---|---|---|---|
| 9 - 10 | 370.0uH±7% | 110.0uH±20% | INPUT 1 Vrms | 0.30 Ω |
| 3 – 4 | | SHORT | 0.0538 Vrms±5.0% | 0.12 Ω |
| | | | | |
| | | | | |
| | | | | |
| | | | | |
| | | | | |

HI-POT TEST :( AT 1 mA , 2 SEC )

PRI. TO SEC. 350 VAC

SEC. TO CORE 350 VAC

INSULATION RESISTANCE:(AT DC 500V)

PRI. TO SEC. 100 MΩ MIN.

SEC. TO CORE 100 MΩ MIN.

WWW.PRISOURCE.COM.TW

| REPORT BY | CHECK BY | APPROVED BY | CUSTOMER : | DATE | |
|---|---|---|---|---|---|
| | | | PART NO：82P-13019 | REV NO. | |
| | | | ISSUE NO： | PAGE | 4 - 2 |

## 4.WINDING SEQUENCE:

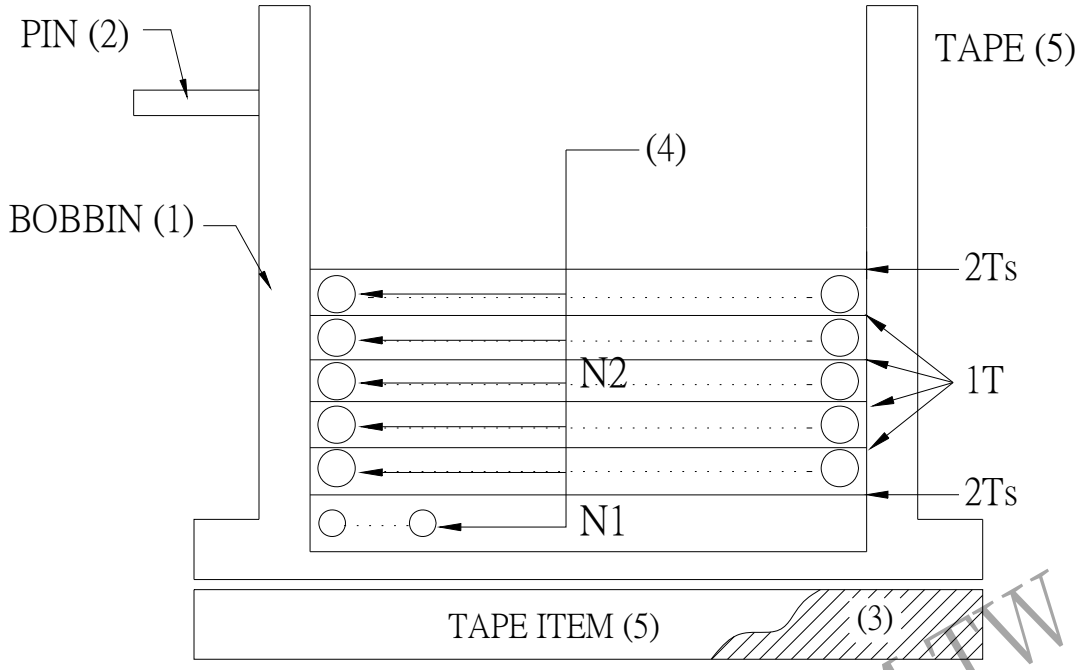


WINDING FORM PIN SIDE

## 5.SCHEMATIC:

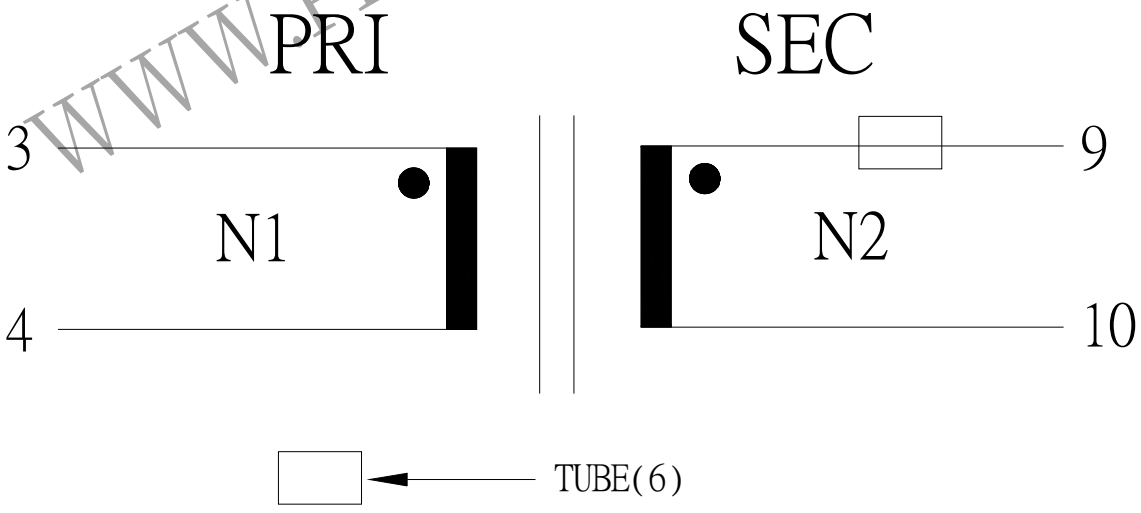


WWW.PRISOURCE.COM.TW

| REPORT BY | CHECK BY | APPROVED BY | CUSTOMER : | DATE | |
|---|---|---|---|---|---|
| | | | PART NO : 82P-13019 | REV NO. NO. | |
| | | | ISSUE NO : | PAGE | 4 - 3 |

6.MATERIAL LIST：

| NO | DESCRIPTION | ITEM | MATERIAL | LIST OF SAMPLE | UL NO. | MANUFACTURE |
|---|---|---|---|---|---|---|
| 1 | BOBBIN | (1) | PHENOLIC(PM9820)<br>Thickness：0.30mm MIN | √ | E41429 | SUMITOMO |
| 2 | PIN | (2) | TINNED COPPER WIRE 0.8 ϕ | √ | | WELL FORE |
| 3 | CORE | (3) | FERRITE PQ32/20<br>PQ32/20 TP4 | <br>√ | | <br>TDG |
| 4 | COPPER WIRE | (4) | POLYURETHANE (1UEWF)<br>MW79 TY1700-U155 | <br>√ | <br>E197768 | <br>HENG YA |
| 5 | MYLAR TAPE | (5) | POLYESTER FILM#1318-1 Y | √ | E17385 | 3M |
| 6 | TUBE | (6) | TEFLON TUBE TFL | √ | E156256 | GREAT HOLDING |
| 7 | EPOXY | | 6020H<br>KE-45W | √<br>√ | E229633 | WELLS<br>SHIN ETSU |

WWW.PRISOURCE.COM.TW

| REPORT BY | CHECK BY | APPROVED BY | CUSTOMER ： | DATE | |
|---|---|---|---|---|---|
| | | | PART NO：82P-13019 | REV NO. | |
| | | | ISSUE NO： | PAGE | 4 - 4 |